A MATTER OF SOME SUPERGRAVITY

Marc Grisaru
Physics Department
McGill University
Montreal QC
Canada H3A 2T8

A few years ago there was an article in The New Yorker magazine about a man who had been educated at MIT and had gone on to a successful engineering career, but eventually not finding this challenging enough had gone to work on Wall Street where he had also been quite successful and made a lot of money. "But", he said during an interview with the writer,putting a lampshade on his head and jumping on the desk, "what I have always wanted to be is a clown". The author writes that indeed, later on, his subject had gone to clown school in Florida and was working now in a circus.

Some of you may know that I have recently resigned my position at Brandeis. Now, I don't intend this to be the end of my physics career, and unlike the man in the New Yorker story I do not plan to become a clown. However, I do want to devote some of my time to other activities, such as story writing, that until now have often been pushed aside by the demands of my life as a physicist. Hence, it is perhaps appropriate that I should take advantage of the opportunity offered by this conference and, instead of describing my recent physics interests, share with you some personal reminiscences and stories about the period when supergravity was discovered.

Once upon a time, about 25 years ago, three naked physicists, Peter van Nieuwenhuizen, Hugh Pendleton and myself, were standing in the locker room of the Brandeis swimming pool. The day before Peter, visiting from Stonybrook, had delivered a talk on the construction of the supergravity lagrangian and, as had been our custom when he was a postdoc at Brandeis, we had gone for a swim. Hugh and I did a very tame crawl but Peter, as you

might expect, did an awesome butterfly with a great deal of wave making and splashing.

When Peter was at Brandeis he and I (and my postdoc Chin Wu) had written a paper in which we applied S-matrix methods to determine tree-level scattering amplitudes for ordinary Einstein gravity, a procedure that was much simpler than actually expanding the Einstein action in powers of the gravitational field and using ordinary Feynman diagram methods. As a matter of fact, having been brought up in the heyday of S-matrix theory, I knew little else – I certainly did not know anything about Einstein theory. In graduate school I had taken a course on relativity from Val Bargman, but it met right after lunch and all I remember from it are a profusion of tensor indices and some wonderful naps. Also, later on, I had heard Bruno Zumino give a talk at Harvard on global supersymmetry and some of the miraculous cancellations of divergences in one-loop amplitudes but it all had seemed rather baroque and I had paid no further attention to the subject.

Anyhow, in the locker room I said to Peter "Do you suppose we could apply the same S-matrix methods to determine scattering amplitudes in supergravity?" He fixed me with those penetrating blue eyes of his, hesitated for a second, and then declared that it would indeed be a good idea. Thus I entered the field, doing local supersymmetry without knowing anything about global supersymmetry and doing supergravity without knowing anything about gravity. That state of affairs lasted for some time after that and even now, 25 years later, my knowledge of general relativity is very scant. But for that work we only needed the fact that the gravitino is massless and has spin 3/2, and that helicity amplitudes for particles with spin satisfy certain kinematical constraints.

So, Hugh Pendleton, Peter and I wrote a paper titled "Supergravity and the S-Matrix" in which we used kinematical considerations to determine some tree level amplitudes in supergravity and also developed formulas for the action on physical states of the supersymmetry generators. (Incidentally, at the time there was no term in general use for the spin 3/2 particle, so Pendleton suggested "hemitrion" – three halves – and that's what we used in our paper. Needless to say, somewhat later, Sidney Coleman suggested a much better name.) Subsequently, Pendleton and I used these formulas to derive certain helicity conservation laws valid for any massless particles in a supersymmetric scattering amplitude. For example, in any supersymmetric theory the vanishing of the helicity amplitude $< +, +|S|-, - >$ follows just from the assumption that the S-matrix commutes with the supersymmetry charges.

That summer we also decided to try our hand at coupling supergravity to supersymmetric matter. In the course of our attempt we discovered the concept of supercovariant derivative; but then I went off sailing and by the time I came back word came from Paris that the coupled lagrangian had been constructed.

For a reason I will explain later, I wish to mention another paper from 1977. A long time ago Weinberg, in an S-matrix mood, had shown how to derive QED and gauge invariance from some general Lorentz invariance considerations involving the masslessness of the corresponding gauge particles and a certain "softness" in their coupling to matter - basically the requirement that in the limit of small momenta the coupling be such that the amplitude for their emission is finite. The same procedure works also in Einstein gravity. Pendleton and I decided to apply this idea to the coupling of massless spin 3/2 particles and we wrote a paper called "Soft Spin 3/2 Fermions Require Gravity and Supergravity". In that paper we were able to obtain from that simple requirement a number of results: (a) if spin 3/2 particles have any interactions then gravitons must also be present and their S-matrix elements must satisfy supersymmetry relations, (b) the S-matrix equivalent of the commutators of supersymmetry charges holds, and (c) when gravitini are coupled to matter the latter must be supersymmetric, etc.; we still called them hemitrions at that time.

At some point, after the preprint was out but before the article was published in Physics Letters, an old paper of Asim Barut was brought to our attention. In there Barut used the same procedure for a spin 3/2 particle coupled to a (0,1/2) pair, might have discovered the results we had and in particular supersymmetry and supergravity, and dismissed it all because he had assumed, for good physics reasons, that $m_0 \neq m_{1/2}$. As he puts it "there seem to be severe limitations on the existence of spin 3/2 particles". The date of the paper is 1969! (A. Barut, Acta Physica Austriaca, Suppl. VI (1969) 1.)

When Peter was at Brandeis, around 1974, he and Stanley Deser (and Hung-Sheng Tsao) had studied one-loop finiteness properties of scattering amplitudes in gravity-matter systems. By then 't Hooft and Veltman had shown that in pure gravity the one-loop amplitudes are finite on shell, but Peter and Stanley studied various matter-gravity systems and found on-shell divergences. What would happen in supergravity was not obvious and at Stony Brook Peter and Vermaseren had started an explicit calculation, using Schoonship, to settle the issue. Around that time I happened to be attend-

ing a conference at Brookhaven and one morning I was sitting in a darkened lecture hall, *not* listening to some phenomenological or experimental talk. It suddenly occured to me that one can make a kind of S-matrix argument to establish that indeed pure supergravity is one-loop finite. (It would happen more than once that some of my ideas occurred while half asleep in a seminar.) Later that day I saw Peter and explained my argument. He bought it, shortly thereafter he and Vermaseren finished their calculation, and we put it all together in a paper showing the one-loop renormalizibility (on shell) of supergravity.

Before much time had passed, I received a preprint from Peter about some work he and my postdoc Wu had done when he was still at Brandeis. They had written down the form of the two-loop divergent part of the effective action in gravity, essentially the (Riemann)^3 action, and worked out the contribution of such a term to graviton-graviton scattering. It was not the kind of paper, involving detailed computer calculations and that mysterious $R_{\alpha\beta\gamma\delta}$ object, I would normally read beyond the abstract but one evening, with nothing better to do, I was turning the pages of this preprint when one statement caught my attention: the amplitudes to which this term contributed were all of the helicity-flip kind, e.g. $< +,+|S|-,- >$ or $< +,+|S|+,- >$. But Pendleton and I had proven that in supersymmetric theories such amplitudes vanish and I realized right away the implications of this fact. A (Riemann)^3 term, and therefore a two-loop divergence, could not occur in pure supergravity. I wrote a draft the same evening, and then sent copies to Peter and also Bruno Zumino. Apparently, the first thing Bruno did was to get on the phone from Geneva and call up Peter to make sure that this guy Grisaru was not some kind of crackpot.

A little later there was a conference at Northeastern University in Boston, attended by many of the big shots in supergravity and other fields as well. Schwinger came from the West Coast, took out his transparencies and discovered that because of humidity they had somehow stuck to each other so that when separated they were totally illegible. He proceeded to use them anyway. Zumino gave a talk on the issues of renormalizability of supergravity and there was a lot of interest in what might happen at higher loops, especially in view of the existence, as discussed by Deser, Kay and Stelle, of the Bell-Robinson tensor. But one of the memories that has stuck in my mind is how, every day of the conference, a small group of us, Bernard de Wit, Peter, – I don't remember who else – would gather together, or go to lunch, and would be stalked and constantly pestered by two unwanted "groupies":

a pair of Harvard graduate students with wild beards, disheveled hair, and sloppy clothes. One of them was Lee Smolin, the other Martin Roček.

Around that time I was also publishing some papers on supercurrent anomalies with Larry Abbott and Howard Schnitzer, so little by little I acquired a superficial knowledge of supersymmetry. But Einstein gravity was still terra incognita except for some rudimentary facts. Nonetheless, in the summer of 1977 I found myself attending the General Relativity and Gravitation conference in Waterloo, Ontario, Canada. Peter was there, and Dan Freedman, and also some relativity classmates from my graduate school days such as Dieter Brill and Charlie Misner. One day Dan Freedman was chairing a session where Stanley Deser was giving a talk on work he had done with Claudio Teitelboim. They had proved, using Hamiltonian methods and $QQ \sim H$, that in *quantum* supergravity the energy of any state was non-negative. So, at some point in the talk Stanley stated that unfortunately a similar proof could not be established even for classical gravity. Needless to say I had never heard of the positive mass conjecture but, bolder than I usually am, I put up my hand and said that if what he and Claudio had proved was true, the result must also hold in classical gravity. What followed was a classic vaudeville routine
SD: No, it's not.
MG: Yes it is.
SD: No it's not.
MG: Yes it is...
until Dan Freedman stepped in and told us to settle our differences outside after the talk.

Right after, at coffee break, several people came up to me, in particular Peter, who dragged me back to my hotel room and sequestered me there, in part to explain to him my idea, and in part to keep me away from certain other people. My thought had simply been that anything that holds in a quantum theory will hold at the classical level simply by taking the $\hbar -> 0$ limit and also, that at the tree level, amplitudes with only external gravitons do not notice that the theory may contain gravitini. Anyway, with Peter's encouragement, I wrote this up and submitted it to Phys. Rev. Letters.

Over the next few days I was bombarded with messages from various mathematicians and relativists – Marsden and Wheeler come to mind. After a few days the excitement died down, because obviously my proof did not meet the necessary standards of rigour. It remained for others to rigorously prove the positive mass conjecture and in particular for Witten to do it start-

ing from supergravity. But I would like to add a footnote to this. Eventually I received a rejection from PRL, with the referee report attached. As I recall, the report consisted of a couple of sentences. "This paper is manifestly wrong. The author takes the limit of Planck's constant going to zero but in fact $\hbar$ is a fixed number so his proof cannot be correct." Of course, had I been more sophisticated, I would have used words such as "loop-counting parameter" instead of $\hbar$ but what did I know? I resubmitted the paper, and got another rejection because I was using such ideas as functional integration over fermions, and at that point I sent it to Physics Letters where it was accepted.

In the fall of 1977 I went to CERN for a year, as a Scientific Associate. I had applied late, but Bruno Zumino did want me to come and when they went through the second round of considering applications, in the spring of 1977, I was accepted. That year, around Thanksgiving, I went to a conference in Trieste. Getting there turned out to be a rather harrowing experience but that's a story for another occasion as is also one experience later on in going to Frascati.

Bernard de Wit was at CERN at that time and we started working on covariant quantization of supergravity. At the time, in the absence of auxiliary fields, one had to deal with a system with open algebra and consequently the quantization, and in particular determining the structure of the ghost lagrangian, which contains a quartic ghost term, had not been simple. So we did it in the one formalism which did have auxiliary fields, namely the Breitenlohner formalism – how many people remember that now? – which involved a horrible number of auxiliary fields. Bernard had to drag me through the whole set of Breitenlohner fields – as I recall he did most of the work and I watched him, nodding my head now and then. We were then in a rush to send out a preprint but of course, at the time, you had to get the CERN secretaries to type the paper and they were famous for putting your paper in the queue and getting to it some time in the distant future. So, we decided to type it ourselves, but that had to be done after hours when the typewriters were available. I don't recall how good a typist Bernard was at the time – I certainly wasn't – and so it turned out into a long evening's session into the night, sometime just before Christmas.

In January 1978 Peter came to CERN and after Christmas he and Sergio Ferrara started working on the auxiliary field problem. They got me involved in the project but again I wasn't of much use. All I recall is long evenings at the even longer blackboard - not the kind of stuff I enjoyed doing. Martin

Roček was also around at the time – one just couldn't get rid of him – watching us. That was in late January, and in February I went with my family for a week's skiing at Argentières in the Chamonix valley. While I was gone Peter and Sergio did manage to figure out the auxiliary fields and they graciously asked me if I wanted my name on the paper, but I declined. Stelle and West came out with their version of auxiliary fields at about the same time.

One day, still at CERN, Zumino came to me with a preprint from Harvard and asked "do you know this guy Siegel?" Well, the only Siegel I had ever known was a graduate student whose father was a tailor, and who had explained to me what the correct length of the sleeve on a man's jacket should be. So I said I did not know this other Siegel but for a while the two became identified in my mind. Bruno asked me to take a look at that preprint but of course I could not make any sense of it. What did I know about superfield supergravity, and constraints, and solving constraints, and what did I know about Warren's style of writing papers? That paper never got published, but some time later I remember Bruno saying "Warren is a genius".

An important thing that happened to me at CERN – it probably changed the direction of my career in physics – was that Dan Freedman, who was also there at the time, asked me to referee a paper by Clark, Piguet and Sibold, about superconformal anomalies in a superspace context. Anomalies were supposed to be my specialty and so I had to make an effort to read the paper even though I knew nothing about superfields; but then I thought that superfields would be an appropriate context in which one should attack the famous anomaly problem – why is the β-function non-zero at all loops while the chiral anomaly satisfies the Adler-Bardeen theorem? – and that's when I took my first tentative steps into superspace. Subsequently I spent some years working on the problem alone, with Peter West, and with Bartosz Milewski and Daniela Zanon. Needless to say, Shifman and Vainshtein eventually came up with their solution to the anomaly problem, but I have to admit that to this day I feel that more could be said.

Upon my return to the States I started going to Harvard because Martin Roček was there putting finishing touches on his PhD thesis and I had been asked to be on his committee. Through him I met Warren, and also Jim Gates, and eventually we all became Warren's groupies. Sometime in the fall we decided to have a little seminar on supersymmetry and supergravity. From those days I remember Warren sleeping through most of the talks (but Kevin Cahill was the champion sleeper). Also, I recall that I was supposed

to prepare a talk on supergraphs, in the formalism where superspace propagators of chiral superfields involved exponentials of θ's. I tried very hard to understand the stuff, especially a paper by Lang, but after I gave my talk Warren told me that it had sounded like a high-school report.

Then, one day, Martin suggested we should try to compute the three-loop β-function for $N = 4$ Yang-Mills. At the time the vanishing at one-loop was well known, and Pendleton and Poggio at Brandeis and independently Tim Jones at CERN, had shown that the two-loop β-function vanished as well. We decided that superspace would be an appropriate framework for attacking the three-loop case. I remember a sunny morning, when I was rushing to Harvard to get started, and I missed the bus near my house, and in my anxiety I ran to try and catch another one further away, and I fell and tore my pants and injured my knee, arriving at Harvard in a not very dignified state for a university professor. At Harvard the first thing the three of us had to do was to go see Michael Peskin to learn how theβ-function was defined. Then we set to work, optimistic that we would knock off the job in a couple of weeks. Well, it took us almost two years. But we started with a great deal of enthusiasm and our first stumbling block was that the supergraph rules, as developed by Salam and Strathdee, and Ogievetski and Mezincescu, and others, were a bit unwieldy. In particular the propagator for a chiral superfield involved that obnoxious exponential, $(1/p^2)exp(i\bar{\theta}p\theta)$.

One day Warren pointed out to me that the same propagator could be written as $(1/p^2)\bar{D}^2D^2\delta(\theta - \bar{\theta})$, though it was not clear what utility that had. That evening, I was lying on the oriental rug of my living room in front of the fireplace fooling around with some supergraph expressions. I know there was no fire in the fireplace but I have always liked to think about the story of Kekulé, the inventor of chemical structure formulas, who supposedly was dozing in front of his fireplace when somehow, in the flames, he saw the benzene ring. Anyway, for whatever reason, I decided to explore the possibility of doing some integration by parts with the D's and it seemed to work. The next day I took this idea to Warren, my guru, and from then on we were able to make some progress and we wrote our paper on improved methods for supergraphs. In that paper we had been able to easily rederive the vanishing of the one- and two-loop beta function and nothing seemed to stand in the way of the three-loop result.

There was a hiatus. In the summer Martin left Harvard and Warren decided to get me involved in superfield supergravity. My first task was to go through the solution of the Bianchi identities for $N = 1$ supergravity.

That turned out to be a very humiliating experience because I really did not understand what it was all about and why one did it, and also the technique for doing that totally eluded me. Warren was a very patient teacher, and he did manage to lead me through to the solution, but to this day Bianchis is something I'm not very good at.

In the fall there was the StonyBrook conference on Supergravity and I gave a talk on supergraphs at the end of which I mentioned that upon my return to Boston I would be joined by Warren and Martin and that we would knock off the three-loop calculation during the following week. The two of them stayed at my house. We worked hard, except for interruptions every evening at 7 when Warren (and my twelve-year-old boys) watched Dr. Who, but by the end of the week it became quite clear that it would take a lot longer than a week to find the answer. What followed wa a slow slog – by then Martin was in Cambridge, England, Warren at the Institute I think, and all I can remember is the various Supergravity conferences I went to where, on every occasion, Eugene Cremmer would come over to me and in an almost conspiratorial tone would say "Ees eet zeró?".

By the time of the Nuffield 1980 conference in Cambridge, the one time that Warren set foot outside the American continent, we had computed all the graphs we could think of, but the result was not zero. Then one day, while waiting in line for the afternoon tea, word reached me that Slavnov had just arrived and reported that Tarasov and Vladimirov, using components and a computer had indeed succeeded in showing that $\beta(\text{three}-\text{loops}) = 0$. I threw a little tantrum, and sulked for a few days, but eventually calmed down and eventually I was persuaded to continue looking at the stuff. But still the result was not zero. Then, one day, in Martin's office, I was showing people, probably including Mike Duff, my correspondence from Warren which always contained some little cartoons and jokes on the margin of the letters. I was looking for a page that contained a picture of a bulldozer and crane, with the caption C&D construction company (for Christensen and Duff who were at the time constructing anomalies for any spin using differential geometric methods) when our eyes fell on a page containing a diagram, and Warren's question "what about this?" written several months earlier, and somehow ignored. Well, after that it all clicked into place. On the night after the conference was over Martin and I did not go to bed, writing a paper for Phys. Rev. Lett., and finishing the following morning while Warren, who had slept comfortably in his bed, was at the laundromat doing his weekly laundry before escaping back to the States.

In the fall of 1981, with the help of John Schwarz I went to Caltech for a year, joining Jim Gates, Martin and Warren. I had also been invited to a little supersymmetry school in Mexico city around Christmas, and I decided to talk about superfields. While preparing my lectures I suggested to the other guys that maybe we could write a Physics Reports article on the subject. While Jim and Martin were enthusiastic, Warren's reaction was "Naah". But by the time I returned to Pasadena after Christmas he had produced the complete table of contents of what was to be eventually our book. We then worked hard. Poor Martin – we made his life miserable becuause his girlfriend wanted him to spend time with her taking pottery classes while we wanted him to spend time with us doing superspace. Warren would also occasionally get mad at us, and we missed Jim who had gone to greener pastures sometime in the spring. But I will just mention two things from that period: Caltech had given me the use of a big Buick, and one day I took Warren to the Los Angeles zoo. Now, like most such places, the zoo is extremely multiply connected, and what I remember is Warren's insistence on tracing a minimal path which would not miss any of the cages. The other thing I remember of course is the work that was going in the office near mine, involving John Schwarz and Michael Green. On several occasions, when hiking together in the San Gabriel mountains, they would urge me to drop superspace and do string theory, but I, like most of the world, thought that would be foolishness.

So, that was that. The rest is more recent history and all I will just offer a few random vignettes.

Peter West, at the Scottish Universities summer school, regularly beating me at ping-pong; I've never been able to win anything with Peter.

The dinner at the restaurant in Miramare, during one of the Spring Schools on Supergravity, with about ten of us putting in the money when the bill came, and finding that someone, forever anonymous,had not paid his share.

The famous big meeting in Paris, in 1982 I believe, with the most fabulous banquet I've ever been to, when Sergio Ferrara got utterly drunk on champagne. And of course, at the opposite end of the spectrum, the banquet at the Nuffield conference at Imperial College in London, which was by far the worst meal we ever had. Much worse than the banquet at the string meeting in Santa Barbara where Paul Ginsparg's table sent out for pizza.

The 1984 meeting in Cambridge where Witten talked about twistors and the coupling of a supergravity to ten-dimensional $N = 1$ supergravity, and

several of us, independently, rushed to the library to grab the appropriate volume in Nuclear Physics which contained the Howe–West paper on N=2 supergravity, the appropriate background for the Green-Schwarz superstring. (Paul Townsend had already taken out that volumet, but he generously shared it with us.). Oh yes, at the same conference, I actually outran Peter van Nieuwenhuizen in a foot race from DAMTP to the pub by the river. He was somewhat surprised.

The time, much earlier at Harvard, after Jim Gates had applied to become an astronaut and the FBI interviewed me to find out if he was a sufficiently loyal citizen.

A rather emotional, for me, first meeting with Renata Kallosh in Trieste, or another occasion, in Moscow, when I met and was finally able to associate real people with what had only been names at the top of physics papers.

But ultimately, I want to say how lucky I have been to have had this long association with people younger and smarter than me, who kept me young with their enthusiasm and good spirits, and a group of physicists who formed in those early days a small congenial community which in spite of rivalries and priority claims managed to maintain a friendship which was, I think, very precious and rare.

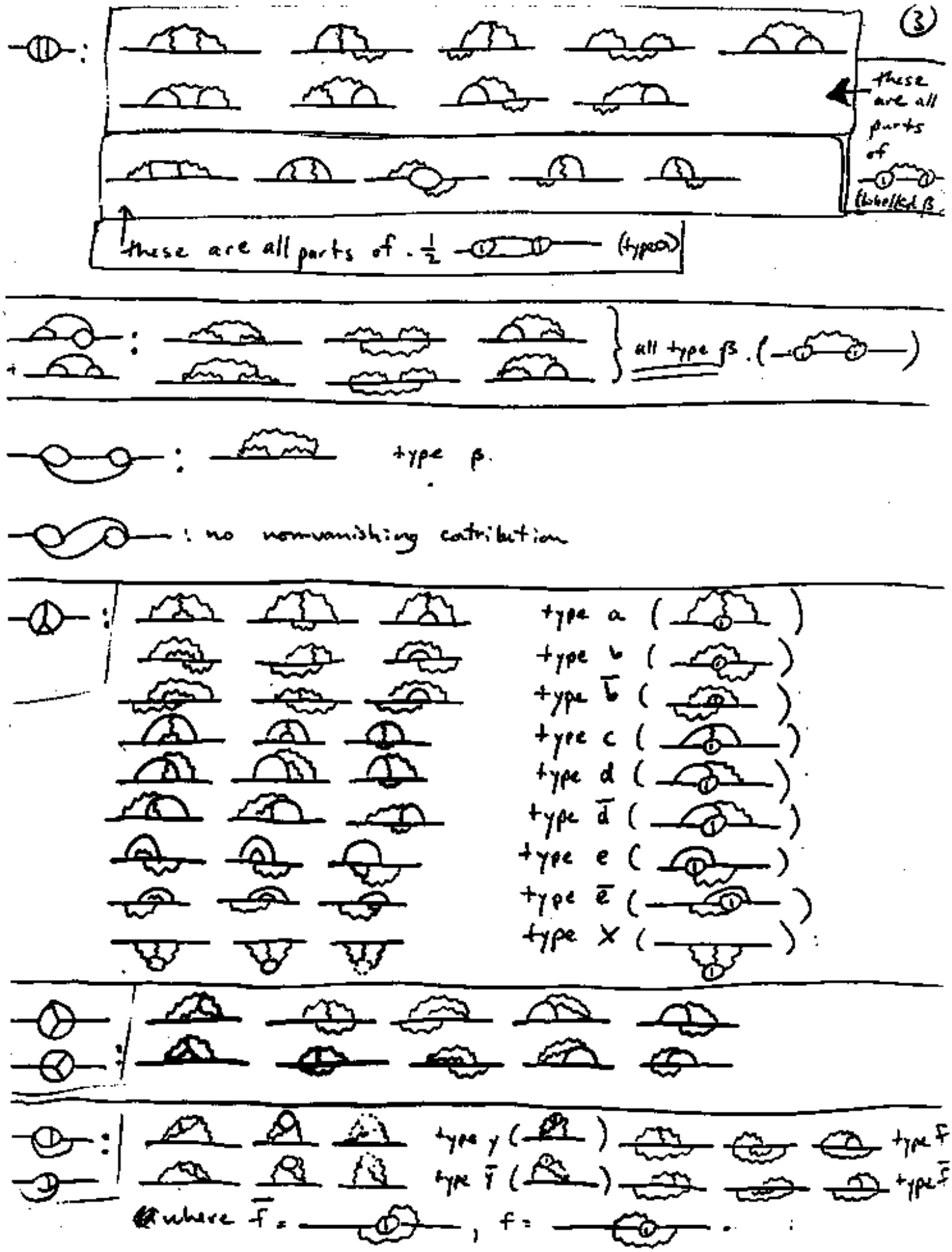

3
these are all parts of
(labelled β)
these are all parts of . ½ (type a)
all type β . ( )
type β.
: no non-vanishing contribution
type a ( )
type b ( )
type b̄ ( )
type c ( )
type d ( )
type d̄ ( )
type e ( )
type ē ( )
type X ( )
type y ( )
type ȳ ( )
type f
type f̄
where f̄ = , f = .

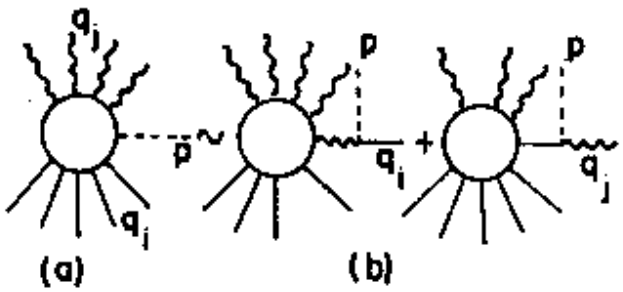

Fig. 1. (a) Typical process with one soft hemitrion. (b) Diagrams dominant in the soft hemitrion limit.

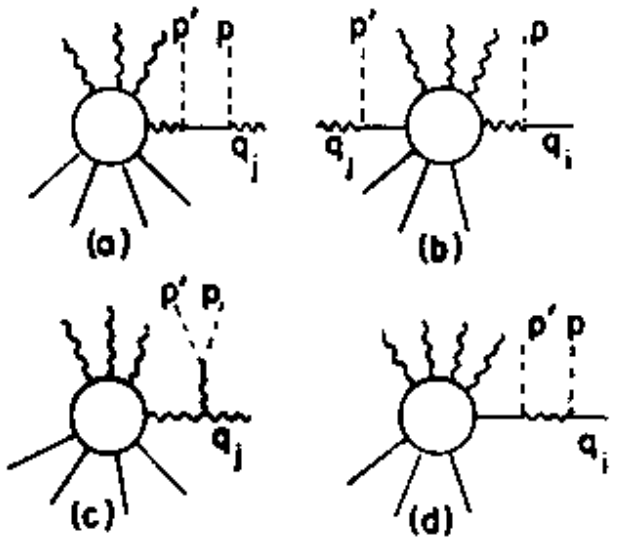

Fig. 2. Dominant diagrams with two soft hemitrions.